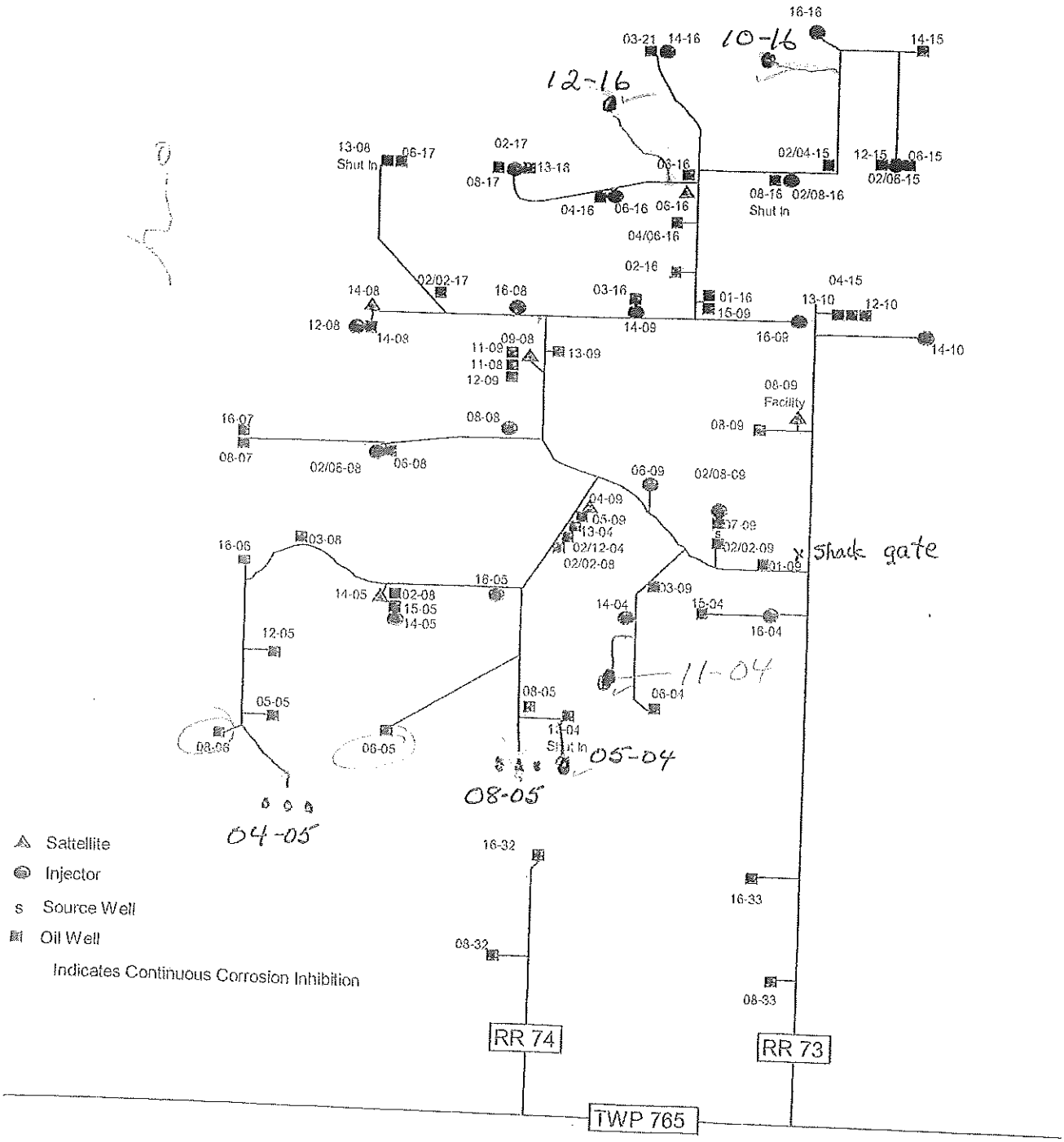Champion Technologies